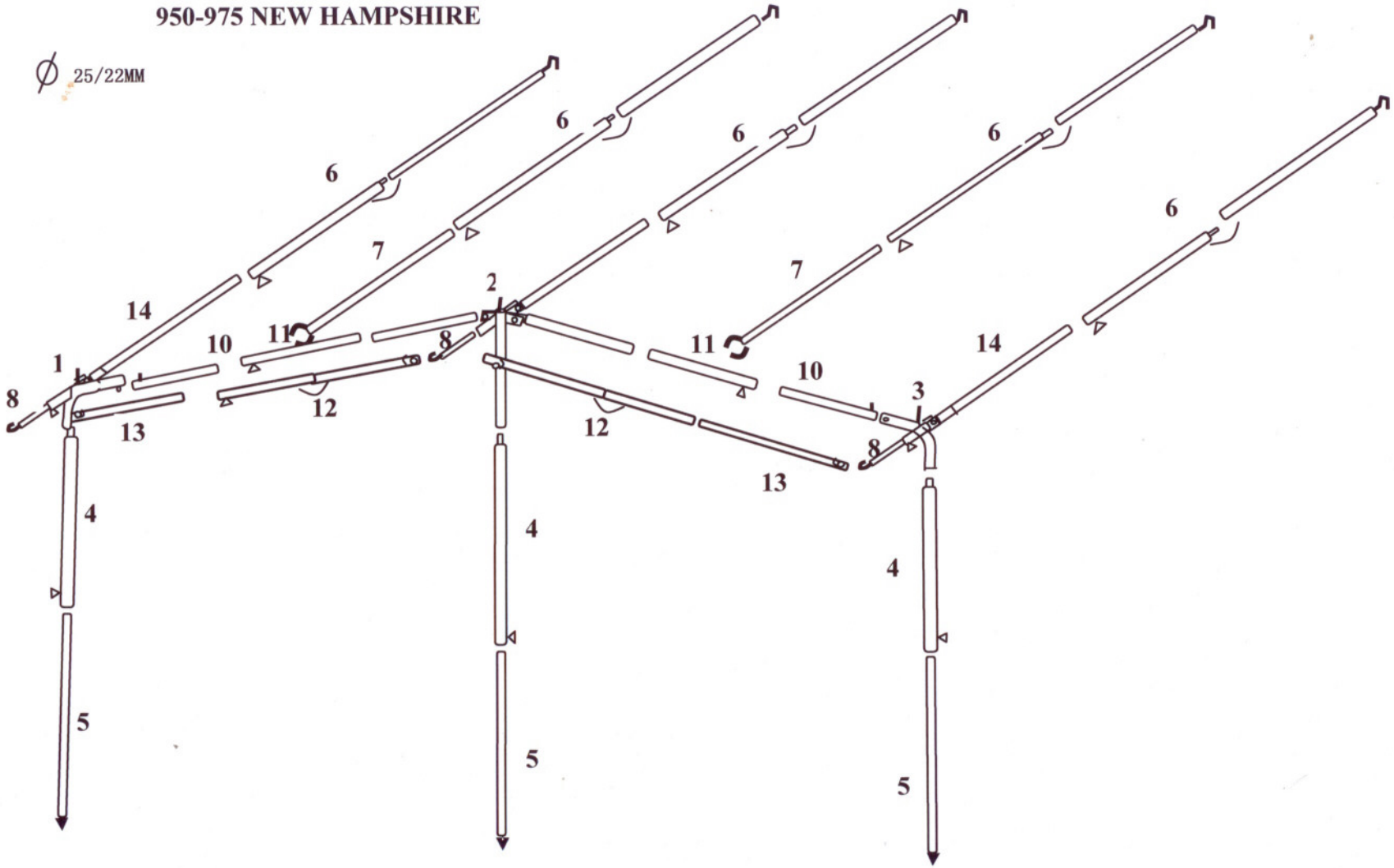950-975 NEW HAMPSHIRE